MARIS

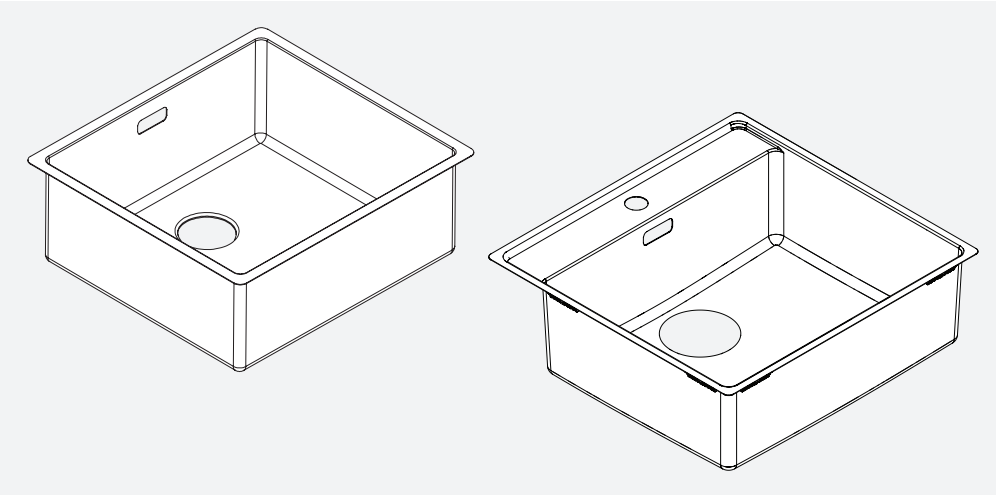

MRX 110/210/120/220

EN	Installation and user manual	Stainless Steel Sinks
DE	Installations- und Gebrauchsanweisung	Edelstahlspülen
FR	Manuel d'installation et mode d'emploi	Eviers en acier inoxydable
NL	Installatie- en gebruikershandleiding	Roestvrijstalen spoelbakken
IT	Manuale per l'installazione e l'uso	Lavelli in acciaio inossidabile
ES	Manual de instalación y servicio	Fregaderos de acero inoxidable
PT	Manual de instalação e de assistência	Lava-loiças em aço inoxidável
EL	Εγκατάσταση και εγχειρίδιο συντήρησης	Νεροχύτες από ανοξείδωτο χάλυβα
DA	Installations- og servicevejledning	Vaske i rustfrit stål
NO	Installasjons- og servicemanual	Vasker i rustfri stål
SV	Installations- och servicehandbok	Rostfria diskbänkar
CS	Montážní a servisní návod	Nerezové dřezy
PL	Instrukcja montażu i obsługi	Zlewozmywaki ze stali nierdzewnej
SK	Návod na inštaláciu a obsluhu	Výlevky z nehrdzavejúcej ocele
RO	Manual de instalare și service	Chiuvete din oțel inoxidabil
BG	Ръководство за монтаж и обслужване	Мивки от неръждаема стомана
UK	Посібник зі встановлення та обслуговування	Мийки з нержавіючої сталі
RU	Руководство по установке и обслуживанию	Мойки из нержавеющей стали
TR	Kurulum ve servis kılavuzu	Paslanmaz Çelik Evyeler
ZH	安装和维修手册	不锈钢槽
AR	دليل التركيب والخدمة	أحواض مصنوعة من الفولاذ المقاوم للصد

Make it wonderful

FRANKE

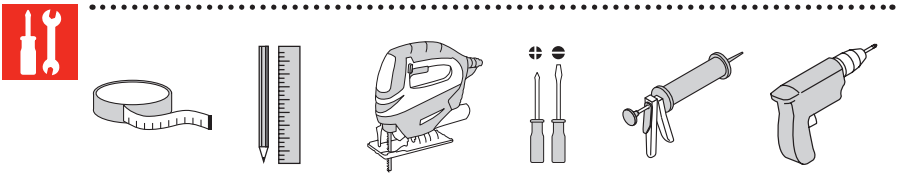

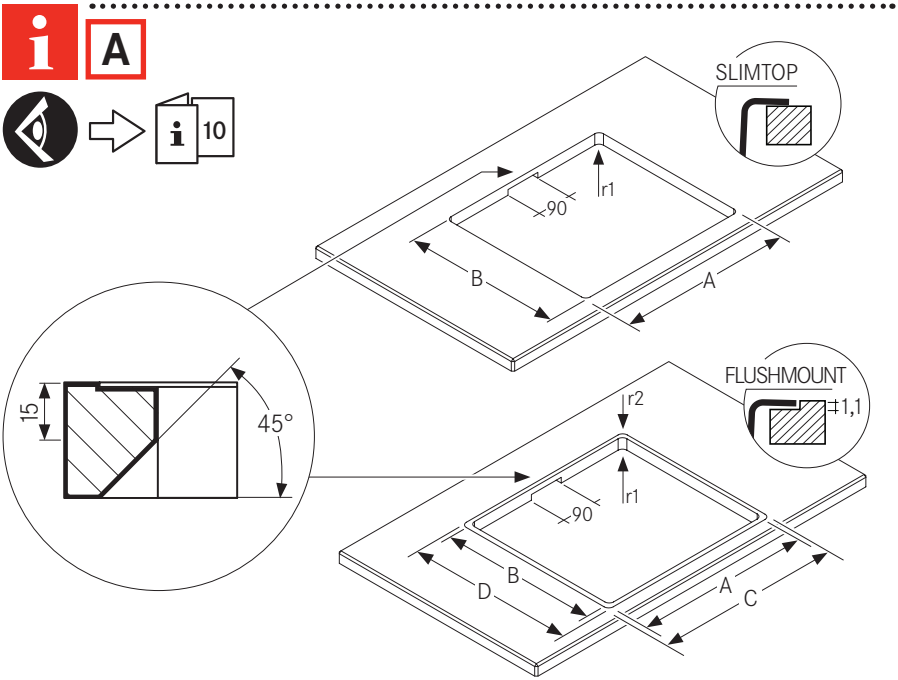
A
10
SLIMTOP
r1
90
B
A
15
45°
FLUSHMOUNT
±1,1
r2
r1
90
B
D
A
C

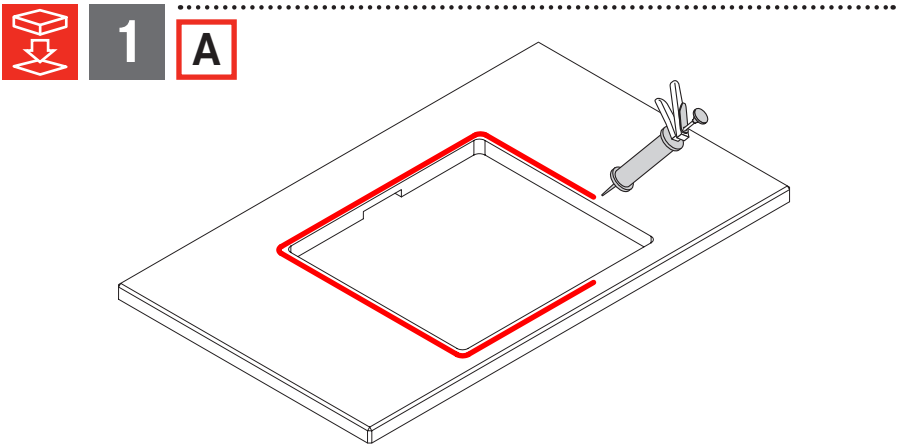
1
A

2 A

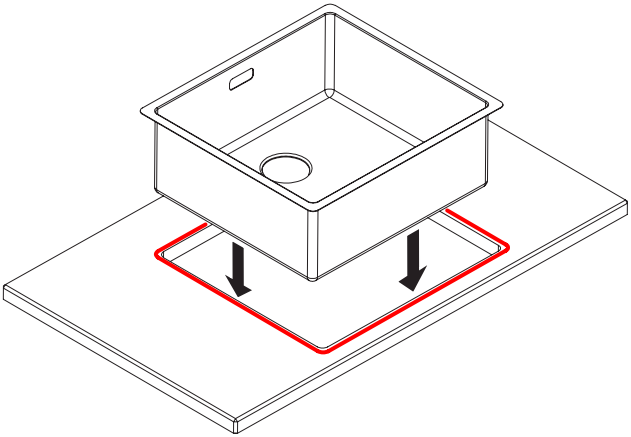

3 A

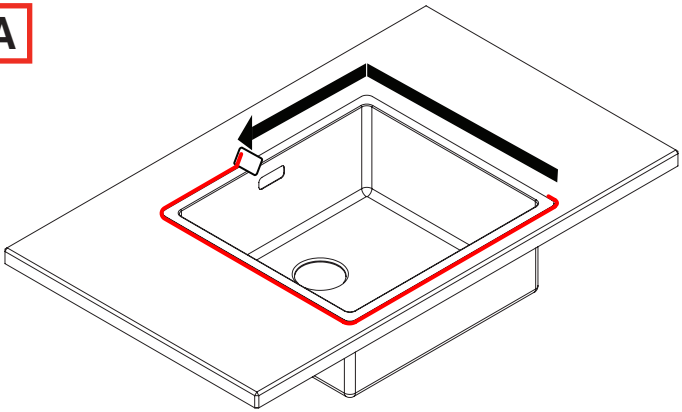

4 A

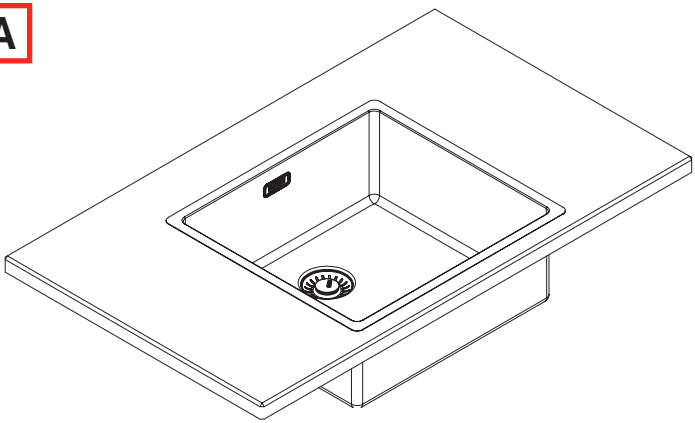

B

10

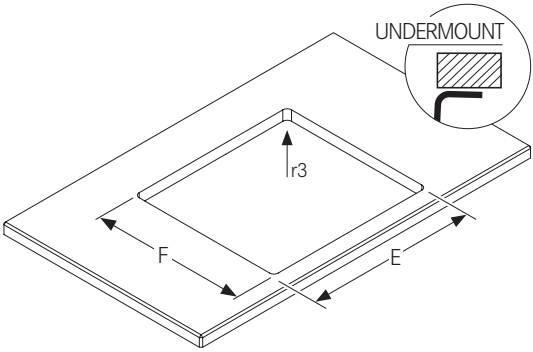

1 B

MRX 110 34

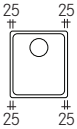

MRX 110 40

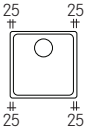

MRX 110 50

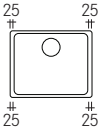

MRX 110 70

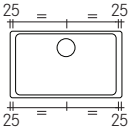

MRX 110 34-34

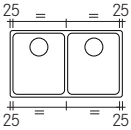

MRX 110 40-40

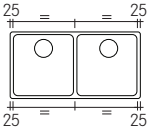

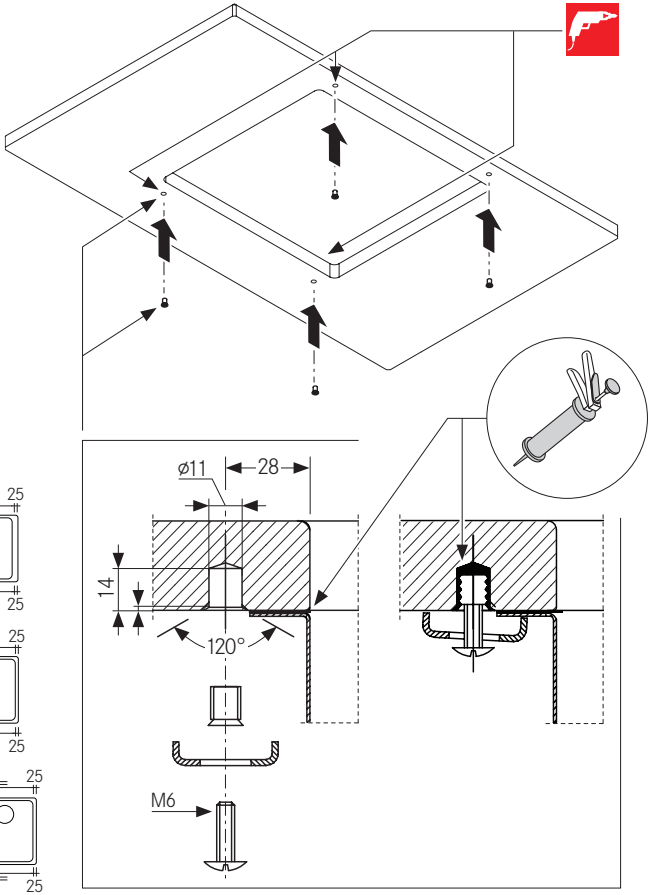

2 B

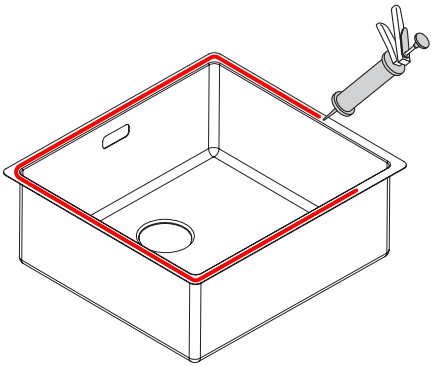

3 B

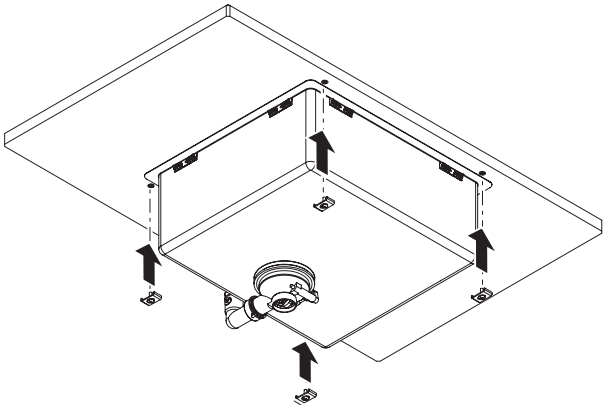

4 B

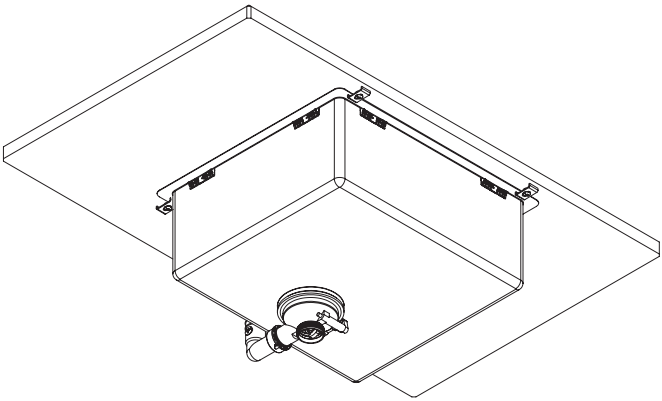

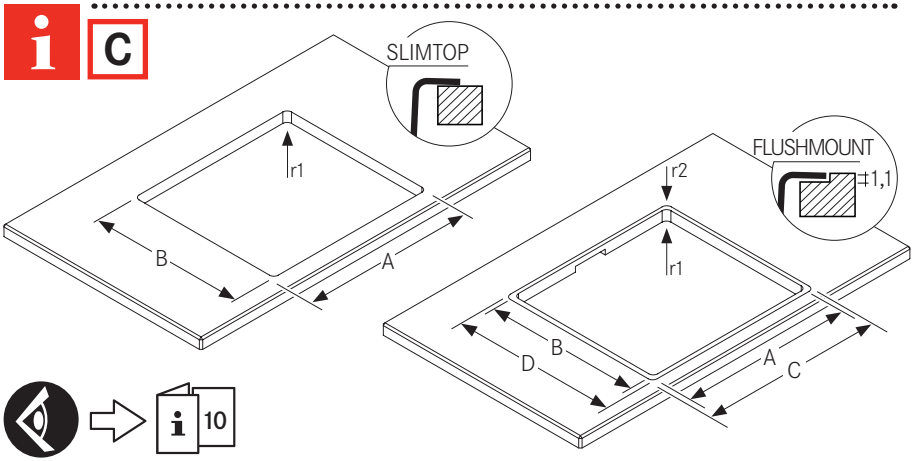
C
SLIMTOP
r1
B
A
FLUSHMOUNT
r2
±1,1
r1
B
D
A
C
10

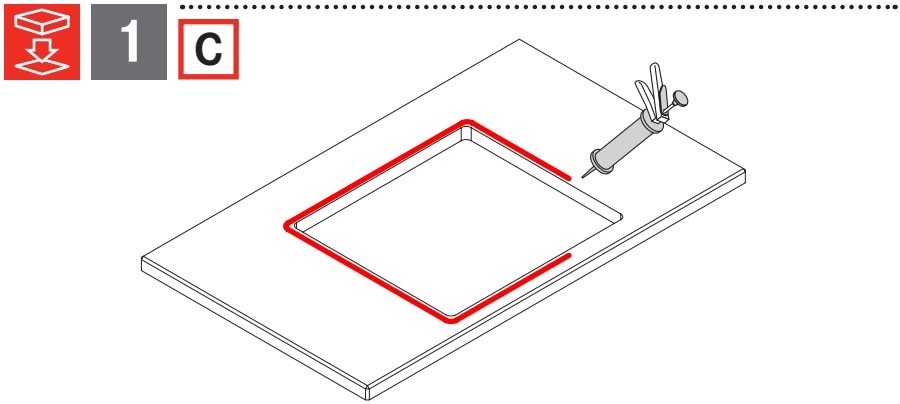
1
C

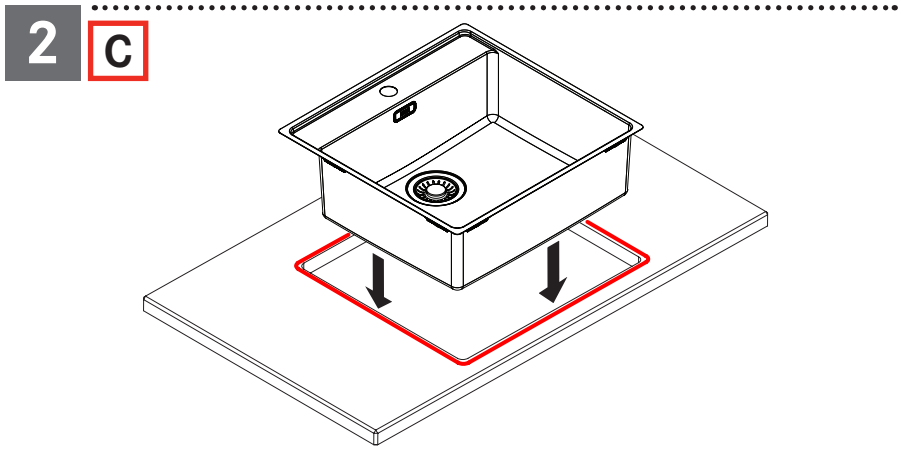
2
C

3 C

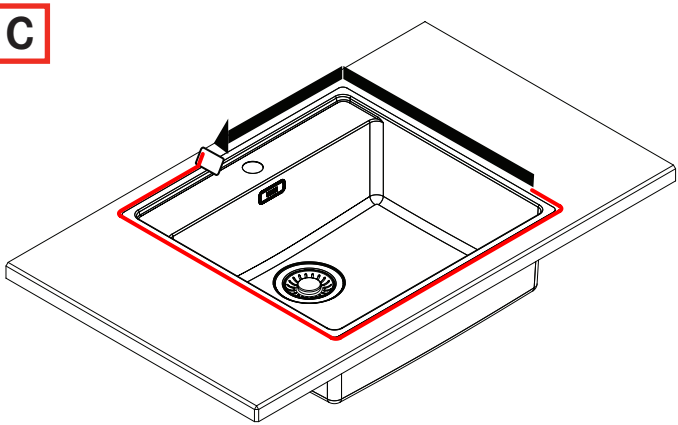

4 C

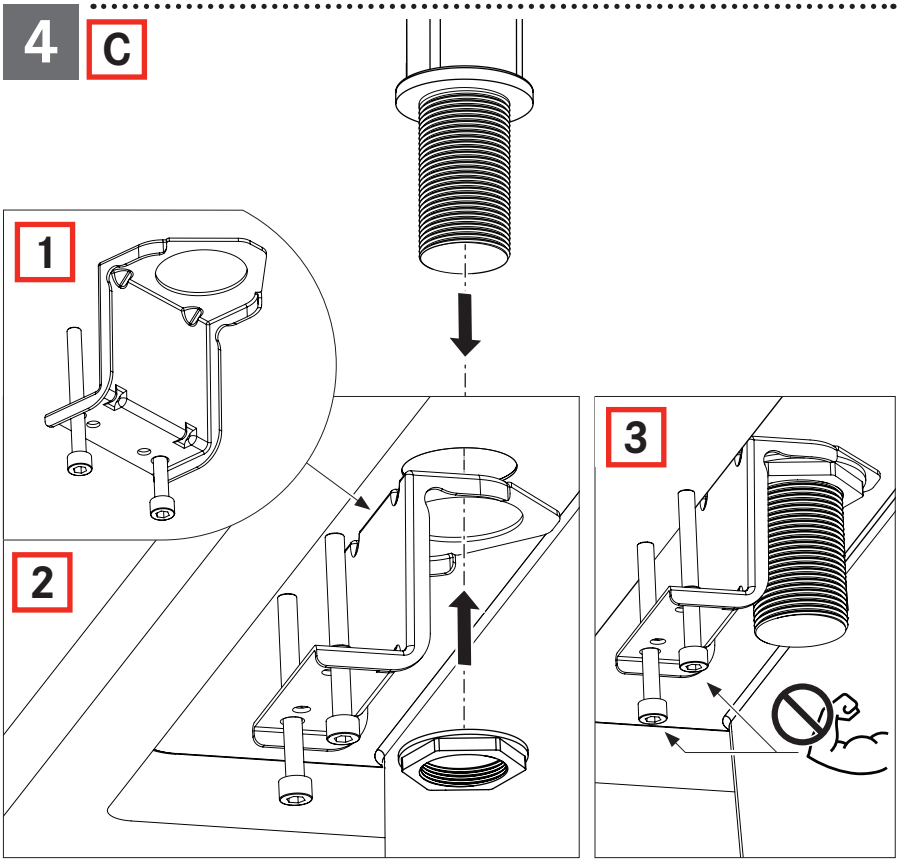

1

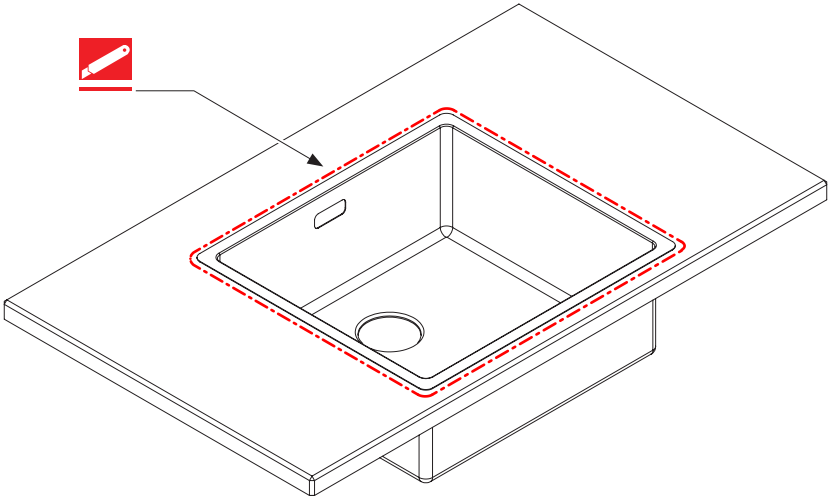

2

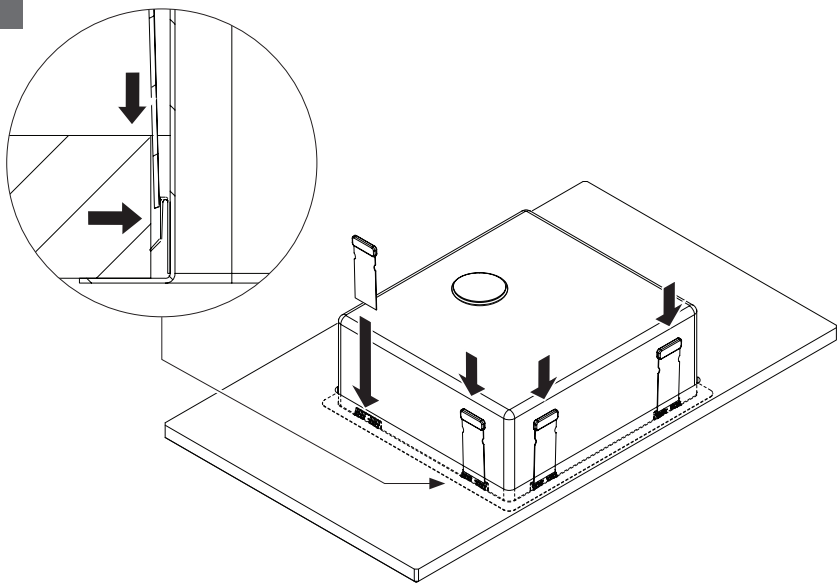

3

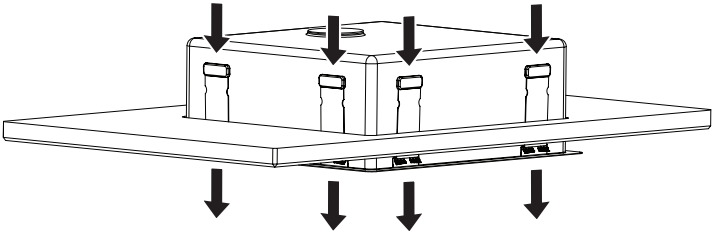

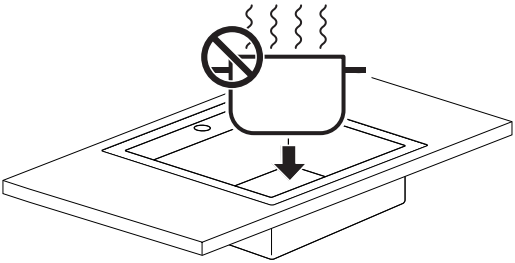

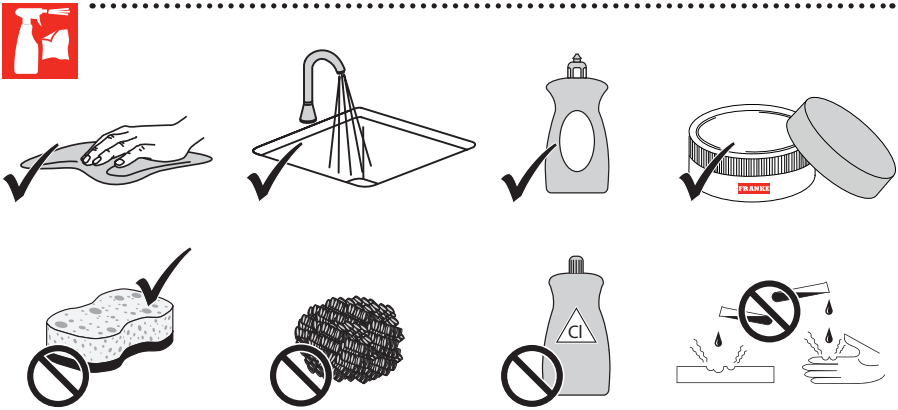

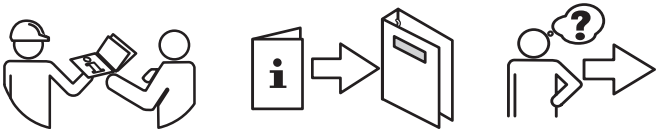

www.franke.com

Model	A	B	C	D	E	F	r1	r2	r3
MRX 110 34					340	400			16
MRX 110 40					400	400			16
MRX 110 50					500	400			16
MRX 110 70					700	400			16
MRX 120 34-34					705	400			16
MRX 120 40-40					825	400			16
MRX 210 34	350	410	382	442			10	11	
MRX 210 40	410	410	442	442			10	11	
MRX 210 50	510	410	542	442			10	11	
MRX 210 70	710	410	742	442			10	11	
MRX 220 34-34	715	410	743	438			10	11	
MRX 220 40-40	835	410	863	438			10	11	
MRX 210 40 TL	410	490	432	512			10	11	
MRX 210 50 TL	510	490	532	512			10	11	
MRX 210 70 TL	710	490	732	512			10	11	

www.franke.com

Argentina
Industrias Spar San Luis S.A.
Buenos Aires 1008
Phone +54 11 4311 7655

Belgium
Franke N.V.
9400 Ninove
Phone +32 54 310 111

Brazil
Franke Sistemas de
Cozinhas do Brasil Ltda.
89219-512 Joinville, SC
Phone +55 47 3431 0501

Canada
Franke Kindred Canada Ltd.
Midland, ON L4R 4K9
Phone +1 866 687 7465

China
Franke (China) Kitchen
Systems Co., Ltd.
Heshan, Guangdong,
529700
Hotline 400 882 9898

Czech Republic
Franke s.r.o.
190 00 Praha 9
Phone +420 281 090 411

Denmark
Franke KS Denmark
8520 Lystrup
Phone +45 8624 9024

Egypt
Franke Kitchen Systems
Egypt S.A.E.
6th of October City
Hotline 16828

Finland
Franke Finland Oy
76850 Naarajärvi
Phone +358 15 341 11

France
Franke France S.A.S.
60230 Chambly
Phone +33 130 289 400

Germany
Franke GmbH
79713 Bad Säckingen
Phone +49 7761 52 0

Greece
Franke Hellas S.A.
19003 Markopoulo Attikis
(Athens)
Phone +30 22991 500 00

Hong Kong SAR
Franke Asia Hong Kong
Causeway Bay
Phone +852 3184 1900

India
Franke Faber India Pvt Ltd.
Aurangabad - 431 136
Phone 1800 209 3484

Italy
Franke S.p.A.
37019 Peschiera del Garda
Numero Verde 800 359 359

Kazakhstan
Franke Kazakhstan Ltd.
040918 Almaty City
Phone +7 727 297 3812

Morocco
Franke Kitchen System SARL
21 000 Casablanca
Phone +212 522 674 200

Norway
Franke KS Norway
8520 Lystrup, Denmark
Phone +47 35 566 450

Poland
Franke Polska Sp. z o.o.
05-090 Raszyn
Phone +48 22 711 6700

Portugal
Franke Portugal S.A.
2735-531 Cacém
Phone +351 21 426 9670

Romania
Franke Romania SRL
Pantelimon 077145
Phone +40 21 350 1550

Russia
Franke Russia GmbH
199106 St. Petersburg
Phone +7 812 703 1540

Slovak Republic
Franke Slovakia s.r.o.
010 01 Žilina
Phone +421 41 733 6200

South Africa
Franke South Africa
Durban 4052
Phone +27 31 450 6300

Spain
Franke España S.A.U.
08174 Sant Cugat del Vallès
Phone +34 93 565 3535

Sweden
Franke Futurum AB
930 47 Byske
Phone +46 912 405 00

Switzerland
Franke Küchentechnik AG
4663 Aarburg
Phone +41 800 583 243

Thailand
Franke (Thailand) Co., Ltd.
Bangkok 10110
Phone +66 2 013 7900

The Netherlands
Franke Nederland B.V.
5700 AD Helmond
Phone +31 492 585 111

Turkey
Franke Mutfak ve Banyo
Sistemleri Sanayi ve
Ticaret A.S.
41400 Gebze Kocaeli
Phone +90 262 644 6595

Ukraine
Franke Ukraina LLC
02081 Kyiv
Phone +38 044 492 0015

United Arab Emirates
Franke LLC
Ras Al Khaimah
Phone +971 7 203 4700

United Kingdom
Franke UK Ltd.
Manchester M22 5WB
Phone +44 161 436 6280

USA
Franke Kitchen Systems LLC
Smyrna, TN 37167
Phone 800 626 5771

© Franke Technology and Trademark Ltd., Switzerland | 2018-01, V01 | 993.0538.800

FRANKE

Make it wonderful